protect. **teach**. **love**.™

Healthy Pet Simply Feed™

Operating Guide

Model Number
PFD00-14574

PLEASE READ THIS ENTIRE GUIDE BEFORE BEGINNING.

IMPORTANT SAFETY INFORMATION

Explanation of Attention Words and Symbols used in this guide

This is the safety alert symbol. It is used to alert you to potential personal injury hazards. Obey all safety messages that follow this symbol to avoid possible injury or death.

WARNING **WARNING** indicates a hazardous situation which, if not avoided, could result in death or serious injury.

CAUTION **CAUTION**, used without the safety alert symbol, indicates a hazardous situation which, if not avoided, could result in harm to your pet.

NOTICE **NOTICE** is used to address safe use practices not related to personal injury.

WARNING

- Do NOT immerse control panel in water. Base unit should NOT be submerged in water at any time, as this may damage electronic components.
- Do NOT place anything on top of the pet feeder. The unit starts automatically. Keep clear.
- Dispose of all packaging materials properly. Some items may be packed in polybags; these bags could cause suffocation; keep away from children and pets.
- Do NOT allow small children to play with, in or around pet feeder.
- To reduce the risk of injury, close supervision is necessary when an appliance is used by or near children.
- Intended for use with dogs or cats only.
- Do NOT use this pet feeder with puppies, kittens, dogs or cats not able to reach the food tray or with any physical disability.
- Do NOT use outdoors. FOR INDOOR HOUSEHOLD USE ONLY. Check operation frequently to be sure the pet feeder is dispensing properly.
- For dry food use only.
- DO NOT use wet, canned or moist food.
- Pet feeder should be placed on a level surface.
- Before leaving for extended time, always replace batteries with new batteries.
- Do NOT place any foreign object in the pet feeder.
- Do NOT disassemble the pet feeder other than components as instructed in this operating guide.
- To protect against electric shock, if using power cord do not place power cord or plug in water or other liquids.
- Only use attachments recommended or sold by the manufacturer.
- Do not unplug by pulling on power cord. To unplug, grasp the plug, not the power cord.
- Do not operate any appliance if it has a damaged power cord or plug, or if it is malfunctioning or has been damaged. Call the Customer Care Center immediately for further instructions.
- For a portable appliance - To reduce the risk of electrical shock, do not place or store an appliance where it can fall or be pulled into a tub or sink.
- Always unplug any appliance when not in use, before putting on or taking off parts and before cleaning. Never pull on the electrical power cord to remove the plug from the wall outlet.
- Do not use an appliance for anything other than its intended use.

- If the plug of this device gets wet, turn off the electricity to that wall outlet. Do not attempt to unplug.
- Examine this appliance after installation. Do not plug in if there is water on the Power Cord or plug.
- To avoid tripping, always position power cord out of the way of foot traffic.

CAUTION

- Do not allow pets to chew on or swallow any parts. If you are concerned about the power cord, purchase a cord conduit (a hard plastic protector) at any hardware store to protect the power cord.

NOTICE

- Do not attempt repairs on the pet feeder yourself.
- If an extension cord is necessary, an extension cord with a proper rating should be used.
- Do not use pet feeder for anything other than intended use. The use of attachments not recommended or sold by the manufacturer may cause an unsafe condition. Do not modify the pet feeder.
- Do not install or store pet feeder where it will be exposed to weather or temperatures below 40° F.
- Do not lift pet feeder by lid, hopper, bowl or bowl holder. Lift and carry feeder using both hands and hopper base, while keeping unit in upright position.
- Read and observe all important notices listed on the pet feeder and in the packaging.

SAVE THESE INSTRUCTIONS

Thank you for choosing the PetSafe® brand. You and your pet deserve a companionship that includes memorable moments and a shared understanding together. Our products and training tools promote a lifestyle of protection, teaching, and love—essentials that influence memories for a lifetime. If you have any questions about our products or training your pet, please visit our website at **www.petsafe.net** or contact our Customer Care Center at **1-800-732-2677**.

PRODUCT WARRANTY

To get the most protection out of your warranty, please register your product within 30 days at **www.petsafe.net**. By registering and keeping your receipt, you will enjoy the product's full warranty and should you ever need to call the Customer Care Center, we will be able to help you faster. Most importantly, PetSafe® will never give or sell your valuable information to anyone. Complete warranty information is available online at **www.petsafe.net**.

Table of Contents

Components 5
How the System Works 5
Features, Controls and Indicators 6
Key Definitions 6
Icons Quick Guide 8
5-Button Navigation Quick Guide 9
Specifications 9
OPERATING GUIDE 10
Prepare and Assemble Feeder 10
  Remove From Package 10
  Clean Removable Parts 10
  Assemble Feeder 11
Initial Setup 12
  Time Setup 12
  Feeding Schedule Setup 13
  Fill with Food 14
Operating Mode. 15
  Button Lock 15
  Slow Feed Mode 15
  Immediate Feed Mode 15
  Pause Feed Mode 15
  View/Change Time 16
  Set-Up Mode 16
Care and Cleaning 17
Power Adapter Operation 18
Troubleshooting 19
Replacement Parts and Accessories 20
Customer Care International 21
Terms of Use and Limitation of Liability 21
Compliance 21
Warranty 22

Components

Note: *Bowl and bowl holder are shipped inside feeder.*

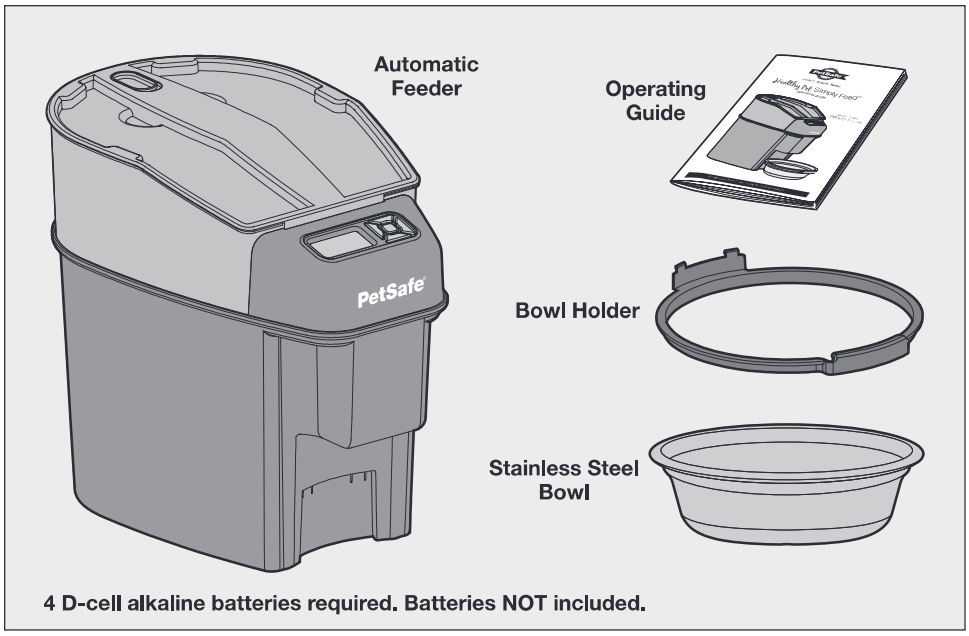

4 D-cell alkaline batteries required. Batteries NOT included.

How the System Works

With its stylish and advanced design, the Healthy Pet Simply Feed™ gives you peace of mind knowing your pet is fed the right portion at the right time whether you are home or away---all while complementing your home décor. Using an innovative conveyor, the Healthy Pet Simply Feed™ consistently controls the food dispensed for your pet, per the portion and schedule you set. Setup is quick with the dog or cat feeding schedules, with preset meal portions dispensed twice a day. The user option allows you to customize your feeding schedule for up to 12 meals each day, giving you the best way to manage your pet's feeding routine. This is especially useful if specialized, smaller portions are required more frequently each day. Fewer refills are needed with the 24-cup capacity hopper, which is translucent for monitoring the food level. Additionally, the unique Slow Feed option is a perfect solution to help with a pet that gulps or eats too fast by slowly dispensing each meal. A scheduled meal can easily be dispensed at the touch of a button with the Immediate Feed option. The Pause Feed option temporarily stops the feeder from dispensing food until pause is removed. This is useful if you want to skip a meal or if going away with your pet for a few days. Programming is easy using the LCD screen and 5-Button Navigation. Ideally, through collaboration with your veterinarian on portions and feeding frequency, the Healthy Pet Simply Feed™ aids you with your pet's proper weight management by providing a consistent, portion-controlled feeding routine for a healthier, happier pet!

Features, Controls and Indicators

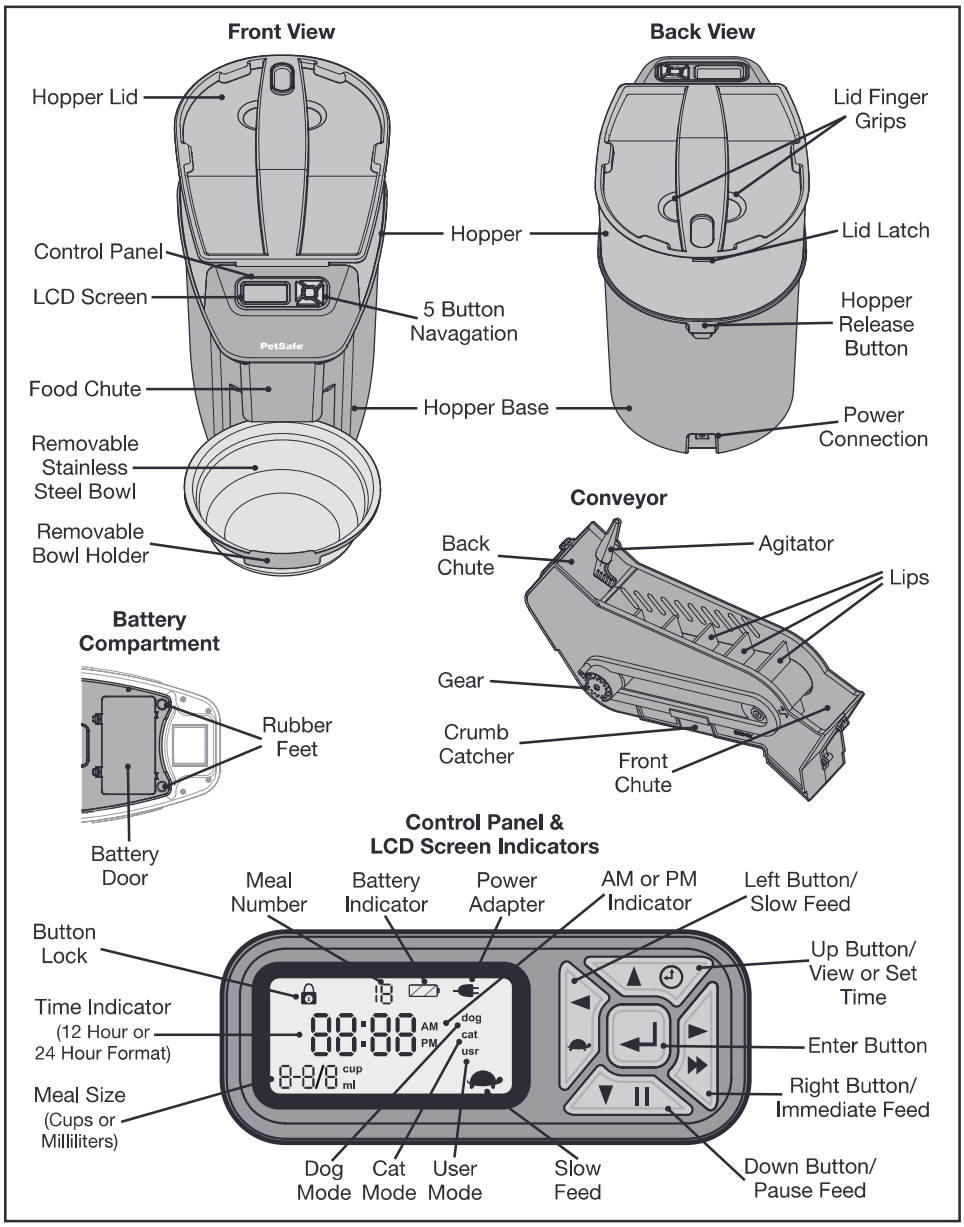

Key Definitions

5-Button Navigation: Group of 5 buttons on control panel with up arrow key, down arrow key, left arrow key, right arrow key, and enter/select key used to navigate LCD screen to program feeder.

Battery Compartment: Located on bottom of feeder hopper base and holds 4 D-cell alkaline batteries.

Battery Cover: Covers and protects the battery compartment.

Bowl Holder: Removable plastic piece which attaches to feeder hopper base and is used to hold stainless steel bowl in place.

Button Lock: The 5-Button Navigation automatically locks after 2 minutes of inactivity and the lock icon appears on LCD screen.

Cat Mode: Default feeding schedule for a cat. Feeder is automatically scheduled to two 1/4-cup (59 ml) meals per day at 8 am (08:00) and 5 pm (17:00).

Control Panel: Area on front of feeder with the 5-Button Navigation and LCD screen.

Conveyor: Moves food through hopper at 1/8-cup increments and dispenses food through food chute into stainless steel bowl.

Dog Mode: Default feeding schedule for a dog. Feeder is automatically scheduled to two 2-cup (473 ml) meals per day at 8 am (08:00) and 5 pm (17:00).

Food Chute: Opening in hopper base and conveyor where food passes through and dispenses into stainless steel bowl.

Food Grade: Material approved to come in direct contact with food without harming the food or changing the color, odor or taste.

Hopper: Holds dry or semi-moist pet food with a 24-cup capacity.

Hopper Base: Holds hopper and bowl. Main part of feeder with the control panel.

Hopper Lid: Fits on top of hopper to cover the pet food.

Hopper Release Button: Allows hopper to be removed for cleaning.

Immediate Feed Mode: Allows next scheduled meal to be dispensed using 5-Button Navigation.

LCD Screen: Liquid crystal display screen to visually display text and images to easily program the pet feeder. Located in the control panel on the hopper base.

Meal Number: Indicates which meal is being programmed. Up to 12 meals can be scheduled.

Meal Size: Indicates portion for meal being programmed or portion for next scheduled meal. Can be set to cups if using 12 hour time format or milliliters if using 24 hour time format. Minimum meal size is 1/8-cup (30 ml) and maximum meal size is 4-cups (946 ml).

Pause Feed Mode: Allows feeding schedule to be temporarily stopped without the need to reprogram or disable power. No food will be dispensed until pause is removed. Picks up as programmed with next scheduled meal when pause is removed.

Power Connector: For connecting the pet feeder to the power adapter (sold separately).

Serial Number: Unique identification number assigned to each pet feeder during manufacturing and is located inside the battery compartment.

Slow Feed Mode: Slows down rate conveyor dispenses food into bowl. Each scheduled meal is slowly dispensed over a 15 minute period. This is useful for a pet that gulps or eats too quickly, causing them to get sick. If Slow Feed is set, it applies to all scheduled meals.

Stainless Steel Bowl: Catches dry pet food when dispensed from feeder food chute with 5-cup capacity.

Time Indicator: Displays the current time or time of next scheduled meal. Can be set to 12 hour or 24 hour format.

Note: ***If time is set to 12 hour format, meal size is automatically set to cups. If time is set to 24 hour format, meal size is automatically set to milliliters.***

User Mode: Allows feeding schedule to be customized by setting number of meals (up to 12 each day), meal times and meal sizes (from 1/8-cup (30 ml) up to 4 cups (946 ml).

Icon and Button Quick Guides

ICONS QUICK GUIDE	
ICON	FUNCTION
05:30 pm 18:00	**TIME INDICATOR** - Displays current time or time of next scheduled meal. Can be set to 12 hour or 24 hour format.
	BUTTON LOCK INDICATOR - Displays when 5-Button Navigation is disabled. Buttons automatically lock when not in use.
	BATTERY INDICATOR - Displays when D-cell alkaline batteries are in use and life status.
	POWER ADAPTER INDICATOR - Displays when power adapter is connected to pet feeder.
2	**MEAL NUMBER INDICATOR -** Displays which meal is being programmed. Up to 12 meals can be scheduled.
1-1/8 cup 30 ml	**MEAL SIZE INDICATOR** - Displays portion for meal number being programmed or portion for next scheduled meal to be dispensed. Can be set to cups if using 12 hour time format or milliliters if using 24 hour time format.
dog	**DOG** - Feeding schedule is set to default dog, which is two 2-cup (473 ml) meals per day at 8 am (08:00) and 5 pm (17:00).
cat	**CAT** - Feeding schedule is set to default cat, which is two ¼-cup (59 ml) meals per day at 8 am (08:00) and 5 pm (17:00).
usr	**USER MODE** - Feeding schedule is set to user mode with customized meal numbers, times and portions.
	SLOW FEED INDICATOR - Displays if feeder is set to Slow Feed Mode, which dispenses all scheduled meals at a slower rate over a 15 minute period.
	PAUSE FEED INDICATOR - Feeding schedules are suspended and feeder will not dispense food until pause is removed.
	IMMEDIATE FEED - Push to immediately dispense next scheduled meal. Only one meal in a row can be immediately fed. A meal must be automatically dispensed before immediate feed can be used again.
	TIME - Push to view current time or push and hold to set clock.

5-BUTTON NAVIGATION QUICK GUIDE			
BUTTON	DESCRIPTION	SETUP MODE FUNCTION	OPERATING MODE FUNCTION
▲	UP	Increases Selection	View Time/Change Time (hold for 5 seconds)
▼	DOWN	Decreases Selection	Pause Feed to temporarily suspend meals
◄	LEFT	Moves Right to Left through editable fields on the LCD screen	Enter/Exit Slow Feed Mode
►	RIGHT	Moves Left to Right through editable fields on the LCD screen.	Immediate Feed
↵	ENTER	Press to program Setup settings to feeder.	Returns to Setup Mode to change feeding schedule (hold for 5 seconds)
↵+▲	ENTER + UP	N/A	Unlock 5- Button Navigation
↵+◄	ENTER + LEFT	N/A	Prepares conveyor with food

Specifications

Programming

- Three feeding schedule options available:
  Dog -Feeder is preset to (2) 2-cup (473 ml) meals per day at 8 am (08:00) and 5 pm (17:00),
  Cat -Feeder is preset to (2) 1/4-cup (59 ml) meals per day at 8 am (08:00) and 5 pm (17:00),
  User -allows feeding schedule to be customized by setting number of meals, meal times, and meal sizes.
- Up to 12 meal times can be set each day (every 24 hours) within 15 minute increments.
- Meal portions adjustable from 1/8-cup up to 4-cups (30 ml up to 946 ml), in 1/8-cup (30 ml) increments.
- Slow Feed Mode – slowly dispenses scheduled food portion over a 15 minute period to help prevent pet from gulping or eating too fast.
- Immediate Feed – dispenses next scheduled meal with the touch of a button using 5-Button Navigation. Programming then picks up with scheduled meal after the meal dispensed.
- Pause Feed Mode – temporarily stops feeding schedule and will not dispense food until pause is removed. When paused is removed it picks up with next scheduled feeding.

Food Types

- Use only dry or semi-moist dog or cat food.
- **Do NOT use canned, wet or moist dog or cat food.**

Capacity

- Hopper holds approximately 24-cups of dry or semi-moist food.
- Bowl holds up to 5-cups of dry or semi-moist pet food.
- Conveyor dispensing capacity is 1/8-cup (30 ml) increments.

Power

- Requires 4 D-cell alkaline batteries. Batteries NOT included.
- Estimated battery life is 1 year.
- Optional power adapter available (sold separately, see ***"Replacement Parts & Accessories"***, page 20).

Step 1

Prepare and Assemble Feeder

1A. Remove From Package

After removing feeder from box and packaging, remove components located inside feeder hopper. Open lid by pulling back finger latch then lifting lid up using finger grips. Remove all components from packaging.

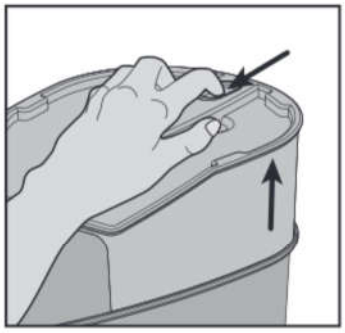

⚠WARNING Dispose of all packaging materials properly. Some items may be packed in polybags; these bags could cause suffocation; keep away from children and pets.

1B. Clean Removable Parts

All parts which contact pet food are made of BPA-free, food grade materials and should be cleaned prior to initial use. These parts easily remove for cleaning. The washable parts are: stainless steel bowl, bowl holder, hopper lid, hopper and conveyor. The stainless steel bowl, bowl holder, hopper lid and hopper are dishwasher safe. Only clean the conveyor by hand-washing using cool or warm soapy water. These washable parts can be submerged in water. Rinse and let all parts air dry completely before assembling feeder. Stand conveyor upright with front chute on flat surface for best drying results. **DO NOT use hot water, submerge the hopper base in water or clean conveyor in an automatic dishwasher.**

⚠WARNING Do NOT immerse control panel in water. Base unit should NOT be submerged in water at any time, as this may damage electronic components.

To Remove Hopper: Press hopper release button on back of feeder then lift to remove.

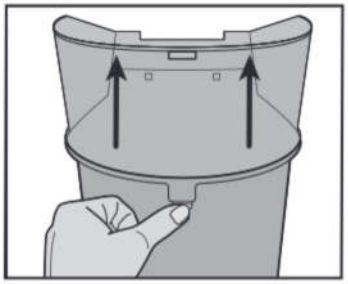

To Remove Conveyor: Pull back red conveyor latch to unlock. Lift to remove.

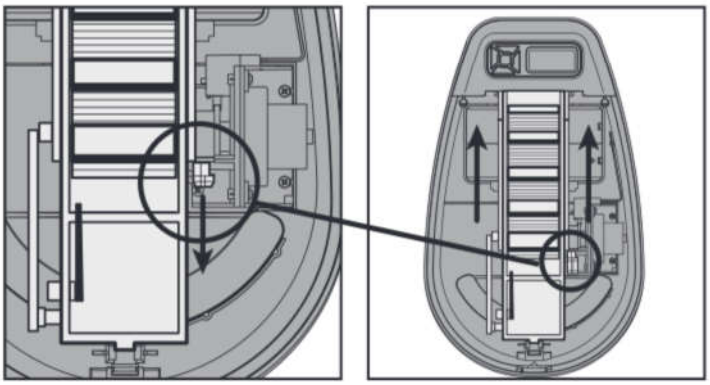

1C. Assemble Feeder

Before assembling feeder, make sure all parts are clean and completely dry. **DO NOT** program or use buttons until feeder is completely assembled. **DO NOT** fill with food until instructed in Step 2C.

To Install Batteries: Push in and lift tabs to remove battery compartment door on bottom of feeder. Install 4 D-cell alkaline batteries into battery compartment, matching battery outlines. Replace battery door.

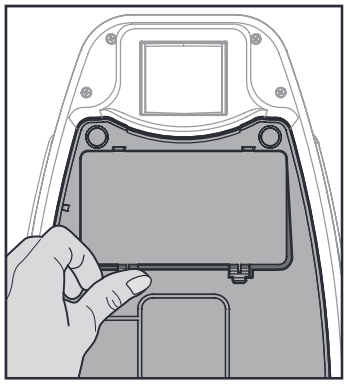

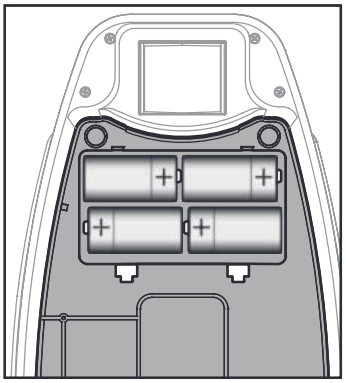

To Install Conveyor: Before installing conveyor, align one lip on conveyor belt with alignment arrows on side of conveyor housing. Install conveyor by first aligning food chute on conveyor front with food chute on front of hopper base. Lower back of conveyor and align with gear in hopper base. Push red conveyor latch to lock in place.

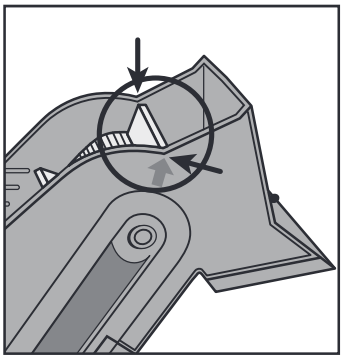

Note: *If conveyor is not installed correctly, red latch will not lock and conveyor will move up and down. Also if conveyor belt is not aligned as instructed, incorrect meal sizes will be dispensed. Ensure conveyor is installed properly before installing hopper.*

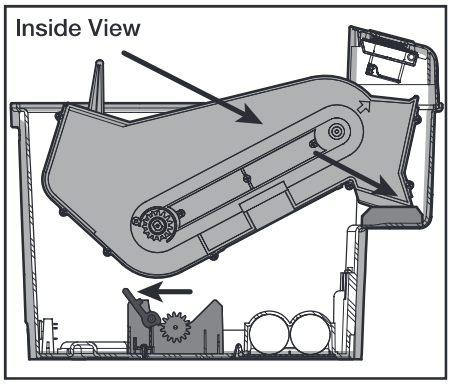

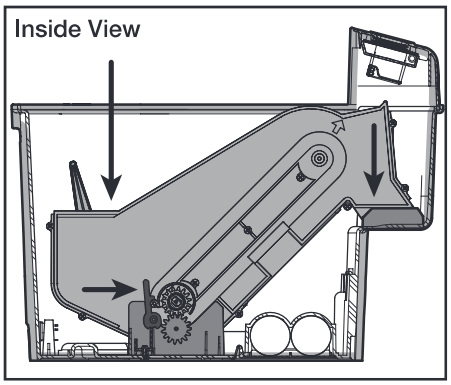

To Install Hopper:
Align back food chute on hopper over conveyor agitator. Ensure conveyor agitator is inside back chute and lower hopper into base. Gently push hopper until release button snaps into place.

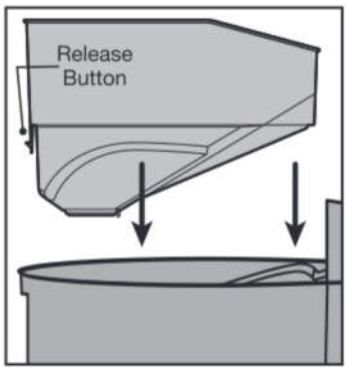

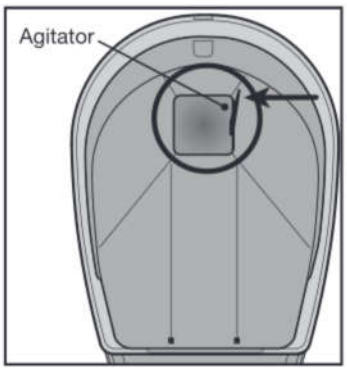

Note: *If hopper is not installed correctly with agitator inside back food chute, agitator can break. Also incorrect meal sizes or no food at all will be dispensed.*

To Install Bowl:
Slide tabs on bowl holder into slots on front of feeder until tabs lock into place. Insert bowl into holder by placing back of bowl under food chute and tilting front of bowl forward, sliding under lip on holder. Lower back of bowl into place.

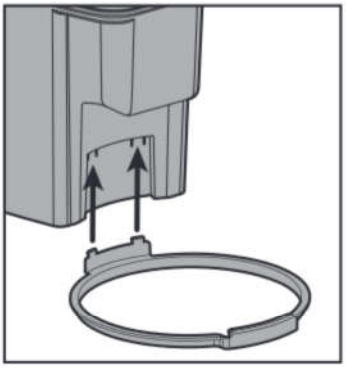

Step 2

Initial Setup

2A. Time Setup:
The feeder automatically enters into **Setup Mode** after batteries are installed or power is connected. The LCD will show a blinking **12** to set time format.

Note: *If time is set to 12 hour format, meal size measurement is automatically set to cups. If time is set to 24 hour format, meal size measurement is automatically set to milliliters.*

To Set Time:
1. After powering feeder, the LCD will show a blinking **12** for time format setup. Use **UP** or **DOWN** buttons to scroll to select **12** hour or **24** hour time format. Press **RIGHT** button to set time.

12 Hour Format:
1. For 12 hour format, the screen will show **12:00 AM** with the hour field blinking. Use **UP** or **DOWN** buttons to scroll through numbers to set current hour with current **AM** or **PM**. Press **RIGHT** button to move to minute field.

2. Use **UP** or **DOWN** buttons to scroll through numbers to set current minute. After current minute is set, press **RIGHT** button to setup feeding schedule.

24 Hour Format:

1. For 24 hour format, the screen will show **0:00** with the hour field blinking. Use **UP** or **DOWN** buttons to scroll through numbers to set current hour. Press **RIGHT** button to move to minute field.

2. Use **UP** or **DOWN** buttons to scroll through numbers to set current minute. After current minute is set, press **RIGHT** button to setup feeding schedule.

2B. Feeding Schedule Setup:

After pressing RIGHT button in Time Setup, the LCD screen shows the time just set and blinks the word **dog** prompting for the feeding schedule to be set. The Healthy Pet Simply Feed™ has three feeding schedule options: default dog (**dog**), default cat (**cat**) or a user option to customize the schedule for your pet (**usr**).

dog: Default feeding schedule for a dog. Feeder is preset to (2) 2-cup (473 ml) meals per day at 8 am (08:00) and 5 pm (17:00).

cat: Default feeding schedule for a cat. Feeder is preset to (2) 1/4-cup (59 ml) meals per day at 8 am (08:00) and 5 pm (17:00).

usr: User option allows the feeding schedule to be customized by setting number of meals, meal times and meal sizes. Up to 12 meals can be scheduled each day (within a 24 hour period). The meal times can be set in 15 minute increments. Meal sizes can be set in 1/8-cup (30 ml) increments, with a minimum portion of 1/8-cup (30 ml) to a maximum portion of 4-cups (946 ml).

To Set Default Feeding Schedule (Dog or Cat):

1. After pressing the **RIGHT** button when Time Setup is complete, the LCD screen shows the time set and blinks the word **dog**. Press **UP** or **DOWN** buttons to scroll to **dog** or **cat** to select desired default feeding schedule.

2. Once desired option is displayed, press **RIGHT** or **ENTER** button to select and enter **Operating Mode** (see *"Operating Mode"* page 15 for more details). The LCD screen will then display the time and size of next scheduled meal.

To Set Custom Feeding Schedule (User):

1. To set your own feeding schedule, press **UP** or **DOWN** buttons to scroll to **usr**.

2. Press **RIGHT** or **ENTER** button to enter customizable meal menu. This is shown by the number **1** blinking at top of LCD screen, which is meal 1. The time indicator of **8:00 AM** (08:00 if set to 24 hour format) should show in middle of screen and meal size of **2 cup** (473 ml if set to 24 hour format) should show in lower left corner of screen. If a different meal was previously setup, then the time and size of that meal will display.

3. Press **RIGHT** button to move to the hour field to set the time for meal **1**.

4. Use **UP** or **DOWN** buttons to set hour for meal 1. If in 12 hour time format, set hour with desired **AM** or **PM** setting. Press **RIGHT** button to move to minute field.

5. Use **UP** or **DOWN** buttons to set minute. Each meal time can be set in 15 minute increments. Press **RIGHT** button to move to meal size field.

6. Use **UP** or **DOWN** buttons to set desired meal size. Meal size can be adjusted in 1/8-cup (30 ml) increments, with a minimum portion of 1/8-cup (30 ml) to maximum portion of 4-cups (946 ml).

Example Meal:

7. Press **RIGHT** button to move back to meal number field. Use **UP** button to move to next meal, which is meal 2. The LCD screen should show time of **5:00 PM** (17:00 if in 24 hour format) and meal size of **2 cup**, unless a different meal was previously setup. To schedule a second meal, press **RIGHT** button to move to hour field to set time. Repeat steps 4 through 7 for as many meals (up to 12) you want to schedule.

Note: ***Up to 12 meals can be scheduled. For any of the 12 meal options you do not want to schedule, leave the meal size fields blank or set to "--- cup" or "--- ml".***

8. After programming desired number of meals, return to the meal number field. Press and HOLD **ENTER** button for 5 seconds to program feeding schedule and enter **Operating Mode** (see *"Operating Mode"* page 15 for more details). The LCD screen will then display the time and size of next scheduled meal.

2C. Fill With Food:

⚠WARNING Do NOT use outdoors. FOR INDOOR HOUSEHOLD USE ONLY. Check operation frequently to be sure the pet feeder is dispensing properly. For dry food use only. DO NOT use wet, canned or moist food. Pet feeder should be placed on a level surface.

NOTICE Do not install or store pet feeder where it will be exposed to weather or temperatures below 40° F.

Place feeder in desired location. Fill feeder hopper with dry or semi-moist pet food, allowing room to replace lid.

To Replace Lid: Align front tab on lid into slot behind the control panel. Lower back of lid and push down until lid latch snaps into place.

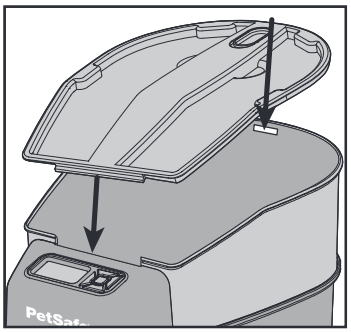

To Prepare Conveyor with Food: If buttons are locked, press **ENTER** and **UP** buttons **AT SAME TIME** to unlock. Next press **ENTER** and **LEFT** buttons **AT SAME TIME** to prepare feeder conveyor to dispense food. Release buttons when you hear conveyor moving and filling each section with food getting ready for the first scheduled meal. Pieces of food may be dispensed into the bowl. Pour any dispensed food back into hopper. Every time the hopper is empty or almost empty and is refilled with food, the conveyor must be prepared.

Note: ***If conveyor is not prepared as instructed, no meal or incorrect meal sizes will be dispensed. Ensure conveyor is properly prepared with food every time hopper is refilled.***

Operating Mode

When you enter Operating Mode, the LCD screen will display the time and size of the next scheduled meal. The additional modes available in Operating Mode are: Slow Feed Mode, Immediate Feed Mode, and Pause Feed Mode. Also you can unlock the 5-Button Navigation, view the current set time, change the time or time format and return to Setup Mode to change the feeding schedule.

Button Lock

After 2 minutes of inactivity, the 5-Button Navigation will lock to prevent it from accidentally being used. The lock icon will show in the upper left corner indicating the buttons are locked.

To Unlock Buttons:

1. Press **ENTER** and **UP** buttons **AT SAME TIME** to unlock the 5-Button Navigation. The lock icon will disappear from the LCD screen.

Slow Feed Mode

Slow Feed Mode. Slow Feed Mode slows down the rate the conveyor dispenses food into the bowl. The conveyor slowly dispenses each meal over a 15 minute period. This mode is applied to all scheduled meals. This is useful if you have a pet that tends to eat their food too quickly, which causes them to get sick.

To Set Slow Feed Mode:

1. If buttons are locked, press **ENTER** and **UP** buttons **AT SAME TIME** to unlock.
2. Press the **LEFT** button. The Slow Feed icon (turtle) will appear in the lower right corner.

To Cancel Slow Feed Mode:

1. If buttons are locked, press **ENTER** and **UP** buttons **AT SAME TIME** to unlock.
2. Press the **LEFT** button. The Slow Feed icon will disappear from LCD screen.

Immediate Feed Mode

If you wish to feed your pet before the next scheduled meal, you can use Immediate Feed Mode. This immediately dispenses the next scheduled meal with a push of a button. The feeder keeps track of this activity and two consecutive meals CANNOT be immediately fed. Another immediate feeding cannot be given until the scheduled meal-after-next is dispensed as programmed.

To Set Immediate Feed Mode:

1. If buttons are locked, press **ENTER** and **UP** buttons **AT SAME TIME** to unlock.
2. Press the **RIGHT** button and the feeder will immediately dispense the next meal scheduled. The LCD screen will display the meal-after-next that is scheduled.

Pause Feed Mode

The Healthy Pet Simply Feed™ allows scheduled meals to be temporarily stopped without the need to reprogram or disable power by setting feeder to Pause Feed Mode. While in Pause Feed Mode, the hopper will not dispense any food into bowl. Also Pause Feed Mode is used during cleaning to keep the feeder conveyor in sync with the feeding schedule. Pause Feed Mode must be canceled for the feeder to resume dispensing the scheduled meals.

To Set Pause Feed Mode:

1. If buttons are locked, press **ENTER** and **UP** buttons **AT THE SAME** to unlock.
2. Press the **DOWN** button and the LCD screen will display "II" indicating Pause Feeding Mode is set.

To Cancel Pause Feed Mode:

1. If buttons are locked, press **ENTER** and **UP** buttons **AT SAME TIME** to unlock.
2. Press the **DOWN** button until the pause indicator "II" is removed from the LCD screen and displays the next scheduled meal.

View/Change Time

While in Operating Mode you can view the time set during the Initial Setup steps. Also you can change the time or time format if you move to a different time zone or country or during Daylight Saving Time.

To View Time:

1. If buttons are locked, press **ENTER** and **UP** buttons **AT SAME TIME** to unlock.
2. Press the **UP** button and the time will display on the LCD screen. DO NOT HOLD button for 5 seconds or more, or you will enter the time setup menu.

To Change Time Format:

1. If buttons are locked, unlock by pressing and holding **ENTER** and **UP** buttons **AT SAME TIME**.
2. Press and HOLD the **UP** button for 5 seconds. The time setup menu will display with the hour field blinking.
3. Press **LEFT** button and LCD screen will display a blinking **12**. Use **UP** and **DOWN** buttons to scroll to select 12 hour or 24 hour format. Use steps 3 and 4 under ***"To Change/Set Time"*** below to set the current hour and minute.

To Change/Set Time:

1. If buttons are locked, press **ENTER** and **UP** buttons **AT SAME TIME** to unlock.
2. Press and HOLD the **UP** button for 5 seconds. The time setup menu will display with the hour field blinking.
3. Use **UP** or **DOWN** buttons to scroll through numbers to set current hour with current AM or PM if in 12 hour format. Press **RIGHT** button to move to minute field.
4. Use **UP** or **DOWN** buttons to scroll through numbers to set current minute. After current minute is set, press **ENTER** or **RIGHT** button to program new time.

Setup Mode

If you wish to change, add or remove a scheduled meal, you will need to return to Setup Mode. You can even adjust meals if you are set to the default **dog** or default **cat** feeding schedule.

Note: ***The default dog and cat options are intended as quick setup for first time use. The only way to return to a default feeding schedule is to remove batteries or power adapter from feeder, wait 10 seconds and reinstall. This will take you back through the Initial Setup steps.***

To Return to Setup Mode:

1. While in Operating Mode, press and HOLD the **ENTER** button for approximately 5 seconds. The LCD screen will return to the meal menu and display the first meal currently scheduled.
2. See steps 2 through 8 under ***"To Set Custom Feeding Schedule (User)"*** page 13 for details on changing the meal settings.

To Exit Setup Mode:

1. After programming desired number of meals, return to meal number field. Press and HOLD **ENTER** button for 5 seconds to program feeding schedule. This returns feeder to **Operating Mode** and the screen will display the next scheduled meal.

Care and Cleaning

The Healthy Pet Simply Feed™ comes apart for easy cleaning. The washable parts are: stainless steel bowl, bowl holder, hopper lid, hopper and conveyor. The stainless steel bowl, bowl holder, hopper lid and hopper are dishwasher safe. Only clean the conveyor by hand-washing using cool or warm soapy water. These washable parts can be submerged in water. Rinse and let all parts air dry completely before assembling feeder. **DO NOT use hot water, submerge the hopper base in water or clean the conveyor in an automatic dishwasher.**

⚠WARNING Do NOT immerse control panel in water. Base unit should NOT be submerged in water at any time, as this may damage electronic components.

To Clean Feeder:

1. If you have any food in the feeder, press **UP** and **ENTER** buttons **AT SAME TIME** to unlock 5-Button Navigation. Next run the ***"To Prepare Conveyor with Food"*** cycle (see page 14) by pressing the **ENTER** and **LEFT** buttons **AT SAME TIME**. This will dispense any food remaining in the conveyor and hopper into the bowl. Repeat the ***"To Prepare Conveyor with Food"*** until no more food is dispensed or just a few pieces of food are dispensed from the feeder.
2. Set feeder to **PAUSE FEED MODE**. This keeps the conveyor in sync with the feeding schedule when reassembled.

3. Remove stainless steel bowl from bowl holder by first lifting up back of bowl and then front.
5. Remove lid by pulling back finger latch then lifting up using finger grips (see ***"Remove From Package"*** page 10).
6. Remove hopper by pressing hopper release button on back of feeder then lift to remove (see ***"Clean Removable Parts"*** page 10).
7. Remove conveyor by pulling back red conveyor latch to unlock. Lift to remove (see ***"Clean Removable Parts"*** page 10).
8. Remove conveyor crumb catcher by gently pressing in sides and pulling down.

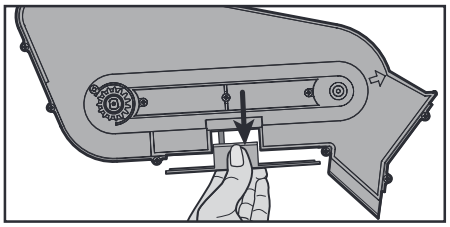

9. Remove bowl holder by releasing one tab on inside of feeder base using a finger nail or screw driver while gently pulling down on same side of bowl holder from the outside. Release other tab and pull down other side of bowl holder.

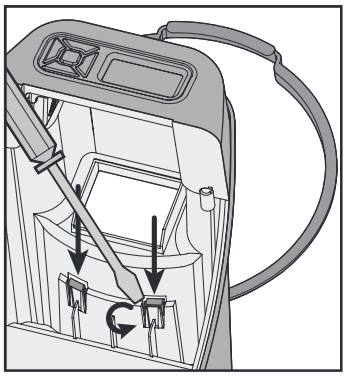

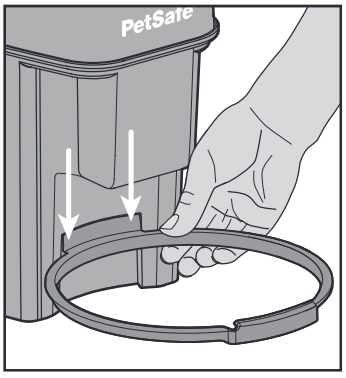

10. The stainless steel bowl, bowl holder, hopper lid and hopper are dishwasher safe. The conveyor must only be washed by hand. Submerge conveyor and crumb catcher in cool or warm soapy water and hand-wash. Use a cleaning brush or toothbrush to clean food debris and residue from conveyor belt. Rinse and let air dry completely. Stand conveyor upright with front chute on flat surface for best drying results.
11. Make sure all parts are completely dry. Reinstall crumb catcher on conveyor. Reassemble feeder ensuring conveyor is aligned and installed correctly (see *"Assemble Feeder"* page 11).
12. After reassembling, make sure to cancel **PAUSE FEED MODE** (see *"Pause Feed Mode"* page 150.
13. After refilling with food, make sure to **push ENTER and LEFT buttons AT SAME TIME to prepare feeder conveyor to dispense food**. You should hear the conveyor moving and filling each section with food getting ready for the first scheduled meal.

Power Adapter Operation

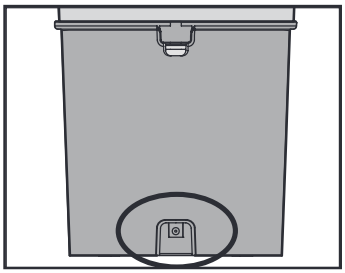

The Healthy Pet Simply Feed™ is battery operated, but has a power adapter connection located on the back of the feeder (power adapter sold separately, see *"Replacement Parts and Accessories"* page 20). If the power adapter is used to operate the feeder, the batteries function as a back-up power source in case of a power loss. When power adapter is being used as power source, the power adapter icon will appear at the top of the LCD screen.

Troubleshooting

The answers to these questions should help you solve most problems you may have with the pet feeder. If they do not, please contact our Customer Care Center at **1-800-732-2677**.

TROUBLESHOOTING	
PROBLEM	**SOLUTION**
5-Button Navigation is locked/ buttons do not work.	• Buttons automatically lock after 2 minutes of inactivity. To unlock 5-Button Navigation, press UP and ENTER buttons AT SAME TIME.
Hopper lid is not fitting properly.	• Ensure conveyor agitator is positioned inside back food chute on hopper with release button locked in place (see ***"To Install Hopper"*** page 12). • Check conveyor is installed with food chute and gear aligned correctly inside hopper base, and conveyor latch is locked in place (see ***"To Install Conveyor"*** page 11).
Hopper is not fitting properly.	• Ensure conveyor agitator is positioned inside back food chute on hopper with release button locked in place (see ***"To Install Hopper"*** page 12). • Check conveyor is installed with food chute and gear aligned correctly inside hopper base, and conveyor latch is locked in place (see ***"To Install Conveyor"*** page 11).
Red conveyor latch will not lock.	• Check conveyor is installed with food chute and gear aligned correctly inside hopper base (see ***"To Install Conveyor"*** page 11).
Not dispensing meal sizes programmed or no food at all.	• Ensure hopper is filled with food. • Check if feeder is in Pause Feed Mode. Feeder will not dispense food until pause is removed (see ***"Pause Feed Mode"*** page 15). • Make sure feeder is not in Setup Mode. Feeder must be in Operating Mode to dispense food (see ***"Setup Mode"*** page 16) • Ensure you are only using dry or semi-moist food. • Check if LCD screen is showing an error. • Ensure conveyor agitator is positioned inside back food chute on hopper with release button locked in place (see ***"To Install Hopper"*** page 12). • Conveyor belt may not have been aligned properly when installed, conveyor may be out of sync with motor or the "prepare conveyor with food" cycle may not have been run when refilling hopper with food. Empty food, remove hopper and conveyor. Reinstall conveyor (see "***To Install Conveyor"*** page 11). Press ENTER and LEFT buttons AT SAME TIME to cycle the conveyor. Remove conveyor again and align lip on conveyor with arrows on side of conveyor housing (see ***"To Install Conveyor"*** page 11). Reinstall conveyor and hopper. Refill with food. Press ENTER and LEFT buttons AT SAME TIME until conveyor starts moving and filling with food. • Meal size/portion may be slightly off due to type of dry or semi-moist food being used. Try adjusting meal sizes accordingly (for example, if feeder is dispensing 1/8-cup less than programmed, increase meal sizes by 1/8-cup).

Dispensing extra meals.	• For any of the 12 meal options you do not want to schedule, leave meal size field blank or set to "--- cup" or "--- ml". Return to Setup Mode by pressing and holding ENTER button for 5 seconds. Use buttons to check each of the 12 meals and ensure meal sizes are set to "--- cup" or "--- ml" for any meals you do not want scheduled (see ***"To Set Custom Feeding Schedule (User)"*** page 13).
Dispensing food slowly.	• Check if Slow Feed mode is set on feeder with Slow Feed indicator displayed in lower right corner of LCD screen. When set, Slow Feed applies to all scheduled meals (see ***"Slow Feed Mode"*** page 15). • Ensure you are using only dry or semi-moist food.
Not dispensing meals at scheduled times.	• Remember that meals can only be scheduled within 15 minute increments (for example: 5:00, 5:15, 5:45 or 6:00 pm). • Check clock to ensure time is set correctly (see ***"View/ Change Time"*** page 16).
Error Screen F01	• Ensure conveyor agitator is positioned inside back food chute on hopper with release button locked in place (see ***"To Install Hopper"*** page 12). All scheduled feedings will stop until error is cleared. To clear error, press ENTER button. Once cleared, feeder will pick up with next scheduled meal. • Jammed motor. All scheduled feedings will stop until error is cleared. To clear error, press ENTER button. Once cleared, feeder will pick up with next scheduled meal. • If F01 error repeats or continues, disassemble and clean feeder, ensuring to thoroughly clean conveyor (see ***"Care and Cleaning"*** page 17).
Error Screen F02	• Switch or motor obstruction or error. Contact Customer Care (see ***"Customer Care International"*** page 21).

Replacement Parts and Accessories

Replacement parts or accessories for your pet feeder can be purchased by visiting **www.petsafe.net** or by contacting our Customer Care Center at **1-800-732-2677**.

Part Description	Replacement Part Number
Power Adapter	PAC00-15035
Hopper Lid	PAC00-15033
Bowl and Bowl Holder Kit	PAC00-15034
Battery Door, Hopper Door and Conveyor Cover Kit	PAC00-15036

Customer Care International

USA & Canada - Tel: 800-732-2677
Monday - Friday 8 AM - 8 PM / Saturday 9 AM – 5 PM

Australia - Tel: 1800 786 608
Monday - Friday 8:30 AM - 5 PM

New Zealand - Tel: 0800 543 054
Monday - Friday 10:30 AM - 7 PM

Terms of Use and Limitation of Liability

1. **Terms of Use**
   This Product is offered to you conditioned upon your acceptance without modification of the terms, conditions and notices contained herein. Usage of this Product implies acceptance of all such terms, conditions, and notices.
2. **Proper Use**
   This Product is designed as a system for automatic dispensing of dry pet food. The specific temperament of your pet may not work with this Product. If you are unsure whether this is appropriate for your pet, please consult your veterinarian, certified trainer or contact our Customer Care Center or visit our website at www.petsafe.net. Proper use includes reviewing the entire Operating Guide provided with your Product and any specific Caution statements.
3. **No Unlawful or Prohibited Use**
   This Product is designed for use with pets only. This device is not intended to harm, injure, or provoke. Using this product in a way that is not intended could result in violation of federal, state or local laws.
4. **Limitation of Liability**
   In no event shall Radio Systems® Corporation be liable for any direct, indirect, punitive, incidental, special or consequential damages, or any damages whatsoever arising out of or connected with the use or misuse of this Product. Buyer assumes all risks and liability from the use of this Product.
5. **Modification of Terms and Conditions**
   Radio Systems® Corporation reserves the right to change the terms, conditions and notices under which this Product is offered.

Compliance

FCC/Canada

This Class B digital apparatus complies with Canadian ICES-003. This equipment has been tested and found to comply with the limits for a Class B digital device, pursuant to Part 15 of the FCC Rules. These limits are designed to provide reasonable protection against harmful interference when the equipment is operated in a residential environment. This equipment generates, uses, and can radiate radio frequency energy and, if not installed and used in accordance with the instruction guide, may cause harmful interference to radio communications. However, there is no guarantee that interference will not occur in a practical installation. If this equipment causes harmful interference to radio or television reception, which can be determined by turning the equipment off and on, the user is encouraged to try to correct the interference by one or more of the following measures:

- Relocate the interfered receiving antenna.
- Increase the separation between the equipment and receiver.
- Connect the equipment into an outlet on a circuit different to that to which the receiver is connected.
- Contact the Customer Care Center 1-800-732-2677.

This device complies with Industry Canada Rules. This device complies with part 15 of the FCC Rules. Operation is subject to the following two conditions: (1) This device may not cause harmful interference, and (2) this device must accept any interference received, including interference that may cause undesired operation.

Unauthorized changes or modifications to the equipment, not approved by Radio Systems® Corporation, could result in not meeting compliance with FCC regulations and could void the user's authority to operate the equipment.

Australia

This device complies with the applicable EMC requirements specified by the ACMA (Australian Communications and Media Authority).

CE

This equipment has been tested and found to comply with relevant EU Electromagnetic Compatibility, Low Voltage and R&TTE Directives. Before using this equipment outside the EU countries, check with the relevant local R&TTE authority. Unauthorized changes or modifications to the equipment that are not approved by Radio Systems® Corporation are in violation of EU R&TTE regulations, could void the user's authority to operate the equipment, and void the warranty. The Declaration of Conformity can be found at: http://www.petsafe.net/customercare/eu_docs.php.

Warranty

One Year Non-Transferrable Limited Warranty

This Product has the benefit of a limited manufacturer's warranty. Complete details of the warranty applicable to this Product and its terms can be found at www.petsafe.net and/or are available by contacting your local Customer Care Center:

Radio Systems PetSafe Europe Ltd, 2nd Floor, Elgee Building, Market Square Dundalk, Co. Louth, Ireland

Radio Systems Corporation, 10427 PetSafe Way, Knoxville, TN 37932 USA

Australia/New Zealand – In compliance with the Australian Consumer Law, Warranties Against Defects, effective January 1, 2012, warranty details of this Product are as follows:

One Year Non-Transferrable Limited Warranty

What is covered: Radio Systems Australia Pty Ltd (hereinafter referred to as "Radio Systems") warrants to the original retail purchaser, and not any other purchaser or subsequent owner, that its Product, when subject to normal and proper residential use, will be free from defects in material or workmanship for a period of one (1) year from the purchase date. An "original retail consumer purchaser" is a person or entity who originally purchases the Product, or a gift recipient of a new Product that is unopened and in its original packaging. When serviced by Radio Systems Customer Service, Radio Systems covers labor and parts for one year of ownership; after the first year, a service or upgrade charge will apply relative to replacement of the Product with new or refurbished items at Radio Systems' sole discretion.

The limited warranty is non-transferrable and shall automatically terminate if the original retail consumer purchaser resells the Radio Systems Product or transfers the property on which the Radio Systems Product is installed. This Limited Warranty excludes accidental damage due to dog chews; lightning damage; or neglect, alteration, and misuse. Consumers who purchase products outside of Australia, New Zealand, or from an unauthorized dealer will need to return the Product to the original place of purchase for any warranty issues.

Please note that Radio Systems does not provide refunds, replacements, or upgrades for change of mind, or for any other reason outside of these Warranty terms.

Claims Procedure: Any claim made under this Warranty should be made directly to Radio Systems Australia Pty Ltd Customer Care Centre at:

Radio Systems Australia Pty Ltd, PO Box 765, Mudgeeraba QLD 4213

Australia Residents: 1800 786 608

New Zealand Residents: 0800 543 054
Email: info@petsafeaustralia.com.au

To file a claim, a proof of purchase must be provided. Without a proof of purchase, Radio Systems will not repair or replace faulty components. Radio Systems requests the Consumer to contact the Radio Systems Customer Care Center to obtain a Warranty Return Number, prior to sending the Product. Failure to do so may delay in the repair or replacement of the Product.

If the Product is deemed to be faulty within 30 days from date of original purchase, Radio Systems will organize for a replacement to be sent in advance of returning the faulty Product. A Post Bag will be included with the replacement Product for the return of the faulty Product. The Product must be returned within 7 days of receiving the replacement. If the Product is deemed to be faulty after 30 days from the date of original purchase, the consumer will be required to return the Product to Radio Systems at the consumer's own expense. Radio Systems will test and replace the faulty unit or its components and return to the consumer free of charge, provided the Product is within its said warranty period. This warranty is in addition to other rights and remedies available to you under the law. Radio Systems goods come with guarantees that cannot be excluded under the Australia Consumer Law. You are entitled to a replacement or refund for a major failure and for compensation for any other reasonably foreseeable loss or damage. You are also entitled to have the goods repaired or replaced if the goods fail to be of acceptable quality and the failure does not amount to a major failure.

Should you have any queries or require any further information, please contact our Customer Care Center on 1800 786 608 (Australia) or 0800 543 054 (New Zealand).

Radio Systems® Corporation
10427 PetSafe Way
Knoxville, TN 37932 USA

1-800-732-2677
www.petsafe.net

400-1863/1

©2014 Radio Systems® Corporation